

Monitor

User Manual

Legal Information

About this Document

- This Document includes instructions for using and managing the Product. Pictures, charts, images and all other information hereinafter are for description and explanation only.
- The information contained in the Document is subject to change, without notice, due to firmware updates or other reasons. Please find the latest version of the Document at the Hikvision website (***https://www.hikvision.com***). Unless otherwise agreed, Hangzhou Hikvision Digital Technology Co., Ltd. or its affiliates (hereinafter referred to as "Hikvision") makes no warranties, express or implied.
- Please use the Document with the guidance and assistance of professionals trained in supporting the Product.

About this Product

This product can only enjoy the after-sales service support in the country or region where the purchase is made.

Acknowledgment of Intellectual Property Rights

- Hikvision owns the copyrights and/or patents related to the technology embodied in the Products described in this Document, which may include licenses obtained from third parties.
- Any part of the Document, including text, pictures, graphics, etc., belongs to Hikvision. No part of this Document may be excerpted, copied, translated, or modified in whole or in part by any means without written permission.
- HIKVISION and other Hikvision's trademarks and logos are the properties of Hikvision in various jurisdictions.
- Other trademarks and logos mentioned are the properties of their respective owners.
- The terms HDMI, HDMI High-Definition Multimedia Interface, HDMI Trade dress and the HDMI Logos are trademarks or registered trademarks of HDMI Licensing Administrator, Inc.

LEGAL DISCLAIMER

- TO THE MAXIMUM EXTENT PERMITTED BY APPLICABLE LAW, THIS DOCUMENT AND THE PRODUCT DESCRIBED, WITH ITS HARDWARE, SOFTWARE AND FIRMWARE, ARE PROVIDED "AS IS" AND "WITH ALL FAULTS AND ERRORS". HIKVISION MAKES NO WARRANTIES, EXPRESS OR IMPLIED, INCLUDING WITHOUT LIMITATION, MERCHANTABILITY, SATISFACTORY QUALITY, OR FITNESS FOR A PARTICULAR PURPOSE. THE USE OF THE PRODUCT BY YOU IS AT YOUR OWN RISK.

IN NO EVENT WILL HIKVISION BE LIABLE TO YOU FOR ANY SPECIAL, CONSEQUENTIAL, INCIDENTAL, OR INDIRECT DAMAGES, INCLUDING, AMONG OTHERS, DAMAGES FOR LOSS OF BUSINESS PROFITS, BUSINESS INTERRUPTION, OR LOSS OF DATA, CORRUPTION OF SYSTEMS, OR LOSS OF DOCUMENTATION, WHETHER BASED ON BREACH OF CONTRACT, TORT (INCLUDING NEGLIGENCE), PRODUCT LIABILITY, OR OTHERWISE, IN CONNECTION WITH THE USE OF THE PRODUCT, EVEN IF HIKVISION HAS BEEN ADVISED OF THE POSSIBILITY OF SUCH DAMAGES OR LOSS.

- YOU ACKNOWLEDGE THAT THE NATURE OF THE INTERNET PROVIDES FOR INHERENT SECURITY RISKS, AND HIKVISION SHALL NOT TAKE ANY RESPONSIBILITIES FOR ABNORMAL OPERATION, PRIVACY LEAKAGE OR OTHER DAMAGES RESULTING FROM CYBER-ATTACK, HACKER ATTACK, VIRUS INFECTION, OR OTHER INTERNET SECURITY RISKS; HOWEVER, HIKVISION WILL PROVIDE TIMELY TECHNICAL SUPPORT IF REQUIRED.
- YOU AGREE TO USE THIS PRODUCT IN COMPLIANCE WITH ALL APPLICABLE LAWS, AND YOU ARE SOLELY RESPONSIBLE FOR ENSURING THAT YOUR USE CONFORMS TO THE APPLICABLE LAW. ESPECIALLY, YOU ARE RESPONSIBLE, FOR USING THIS PRODUCT IN A MANNER THAT DOES NOT INFRINGE ON THE RIGHTS OF THIRD PARTIES, INCLUDING WITHOUT LIMITATION, RIGHTS OF PUBLICITY, INTELLECTUAL PROPERTY RIGHTS, OR DATA PROTECTION AND OTHER PRIVACY RIGHTS. YOU SHALL NOT USE THIS PRODUCT FOR ANY PROHIBITED END-USES, INCLUDING THE DEVELOPMENT OR PRODUCTION OF WEAPONS OF MASS DESTRUCTION, THE DEVELOPMENT OR PRODUCTION OF CHEMICAL OR BIOLOGICAL WEAPONS, ANY ACTIVITIES IN THE CONTEXT RELATED TO ANY NUCLEAR EXPLOSIVE OR UNSAFE NUCLEAR FUEL-CYCLE, OR IN SUPPORT OF HUMAN RIGHTS ABUSES.
- IN THE EVENT OF ANY CONFLICTS BETWEEN THIS DOCUMENT AND THE APPLICABLE LAW, THE LATTER PREVAILS.

© Hangzhou Hikvision Digital Technology Co., Ltd. All rights reserved.

Applicable Models

This manual is applicable to monitor.

Symbol Conventions

The symbols that may be found in this document are defined as follows.

Symbol	Description
Note	Provides additional information to emphasize or supplement important points of the main text.
Caution	Indicates a potentially hazardous situation, which if not avoided, could result in equipment damage, data loss, performance degradation, or unexpected results.
Danger	Indicates a hazard with a high level of risk, which if not avoided, will result in death or serious injury.

Safety Instructions

Danger

- Caution: The device may generate radio interference in indoor environment. Necessary precautions may be required.
- In the use of the product, you must be in strict compliance with the electrical safety regulations of the nation and region.
- Input voltage should meet both the SELV (Safety Extra Low Voltage) and the Limited Power Source with 100 to 240 VAC or 12 VDC/2A according to the IEC60950-1 standard.
- If the device uses a 3-prong power supply plug, it must be connected to an earthed mains socket-outlet properly.
- For the device powered on and off only by power plug and socket-outlet, the socket-outlet shall be installed near the device and shall be easily accessible.
- Do not touch the bare components (such as the metal contacts of the inlets) and wait for at least 5 minutes, since electricity may still exist after the device is powered off.
- For the device with the sign ϟ indicating hazardous live, the external wiring connected to the terminals requires installation by an instructed person.
- Never place the device in an unstable location. The device may fall, causing serious personal injury or death.

- If the device supports wall mounting or ceiling mounting, the mounting surface shall be able to withstand the additional force of three times the weight of the device but not less than 50 N. The device and its associated mounting means shall remain secure during the installation.
- If the device contains a coin/button cell battery:
  1. Do not ingest battery. Chemical Burn Hazard!
  2. This product contains a coin/button cell battery. If the coin/button cell battery is swallowed, it can cause severe internal burns in just 2 hours and can lead to death.
  3. Keep new and used batteries away from children.
  4. If the battery compartment does not close securely, stop using the product and keep it away from children.
  5. If you think batteries might have been swallowed or placed inside any part of the body, seek immediate medical attention.
  6. CAUTION: Risk of explosion if the battery is replaced by an incorrect type.
  7. Improper replacement of the battery with an incorrect type may defeat a safeguard (for example, in the case of some lithium battery types).
  8. Do not dispose of the battery into fire or a hot oven, or mechanically crush or cut the battery, which may result in an explosion.
  9. Do not leave the battery in an extremely high temperature surrounding environment, which may result in an explosion or the leakage of flammable liquid or gas.
  10. Do not subject the battery to extremely low air pressure, which may result in an explosion or the leakage of flammable liquid or gas.
  11. Dispose of used batteries according to the instructions.
- ALWAYS use cabinets or stands or mounting methods recommended by the manufacturer of the device set.
- ALWAYS use furniture that can safely support the device set.
- ALWAYS ensure the device set is not overhanging the edge of the supporting furniture.
- ALWAYS route cords and cables connected to your device so they cannot be tripped over, pulled or grabbed.
- NEVER place a device set in an unstable location.
- NEVER place the device set on tall furniture (for example, cupboards or bookcases) without anchoring both the furniture and the device set to a suitable support.
- NEVER place the device set on cloth or other materials that may be located between the device set and supporting furniture.
- NEVER place items that might tempt children to climb, such as toys and remote controls, on the top of the device or furniture on which the device is placed.
- For the device with sound playing function, to prevent possible hearing damage, do not listen at high volume levels for long periods.

Caution

- If the ingress protection level is lower than IPx4, the device shall not be exposed to water dripping or splashing and that no objects filled with liquids, such as vases, shall be placed on the equipment.
- Provide a surge suppressor at the inlet opening of the device under special conditions such as the mountain top, iron tower, and forest.
- If the device is powered by terminals connected to the power cord, ensure correct voltage and wiring of the terminals for connection to mains supply.
- For the device with ventilation openings, the ventilation openings should not be impeded by covering the ventilation openings with items, such as newspapers, table-cloths, and curtains. The openings shall never be blocked by placing the device on a bed, sofa, rug, or other similar surface.
- If the device has ventilation openings and distance requirements for heat dissipation, keep a proper distance around the device for sufficient ventilation.
- If the device installation is needed,
  1. Install the device according to the instructions in User Manual.
  2. To prevent injury, this device must be securely attached to the installation surface in accordance with the installation instructions.
- Keep vertical when moving or using the device.
- CAUTION: If the bracket is designed for a specific device model of our company, use the bracket with the corresponding device only. Use with other devices may result in instability and cause injury.
- CAUTION: If the device needs to be installed with a specific bracket of our company, use the corresponding bracket only. Use others (such as carts, stands, and carriers) may result in instability and cause injury. Refer to the device datasheet for bracket model details.
- The interface varies with the models. Please refer to the product datasheet for details.
- If the device is not released with a power adapter, and you need to wire the bare cables of the device:
- The device external wiring connected to the hazardous live terminals requires installation by an instructed person.
- Make sure that the power has been disconnected before you wire, install, or disassemble the device.
- The power supply or device must be connected to an earthed mains socket-outlet.
- High voltage for the power supply. Do not disassemble it.
- If smoke, odor, or noise arises from the power supply or device, immediately turn off the power, unplug the power cable, and contact the service center.
- If the device needs to be wired by yourself, select the corresponding wire to supply power according to the electric parameters labeled on the device. Strip off wire with a standard wire stripper at corresponding position. To avoid serious consequences, the length of stripped wire shall be appropriate, and conductors shall not be exposed.
- If a power adapter is provided in the device package, use the provided adapter only.

- Seven ESD stickers are attached to the back of the device.

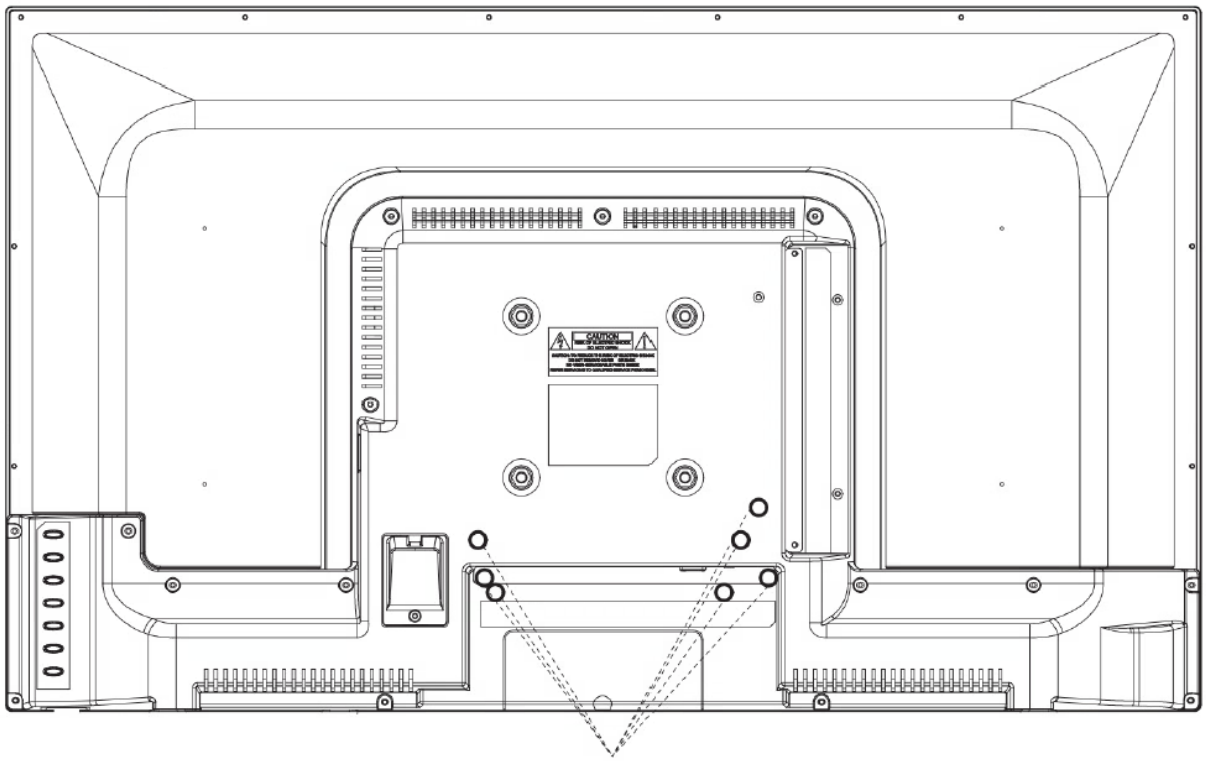

Contents

Chapter 1 Installation and Cable Connection 1
1.1 Install the Base 1
1.2 Connect the Power Cord and Signal Cables 2
Chapter 2 Product Introduction 3
2.1 Buttons on Front Panel 3
2.2 Interfaces on Rear Panel 4
Chapter 3 Remote Control 5
Chapter 4 OSD Operations 6
4.1 Select the Signal Source 6
4.2 Operate the OSD 6
4.3 OSD Function 7

Chapter 1 Installation and Cable Connection

Note

The installation drawings are for reference only.

1.1 Install the Base

Step 1 Gently lift the device. Place the screen down on a stable surface covered with a thick soft cloth.

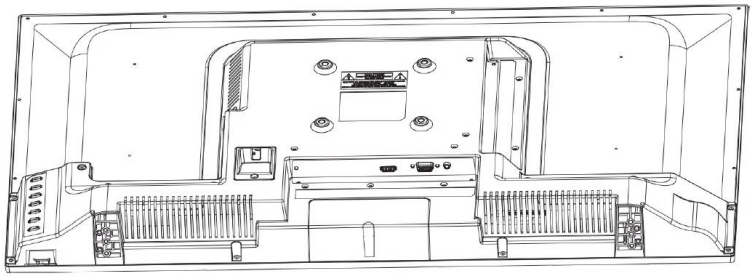

Figure 1-1 Place the Device

Step 2 Take out the base and screws. Install the L-marked base on the bottom left side of the device and the R-marked base on the bottom right side of the device when facing the screen, as is shown in the figure below.

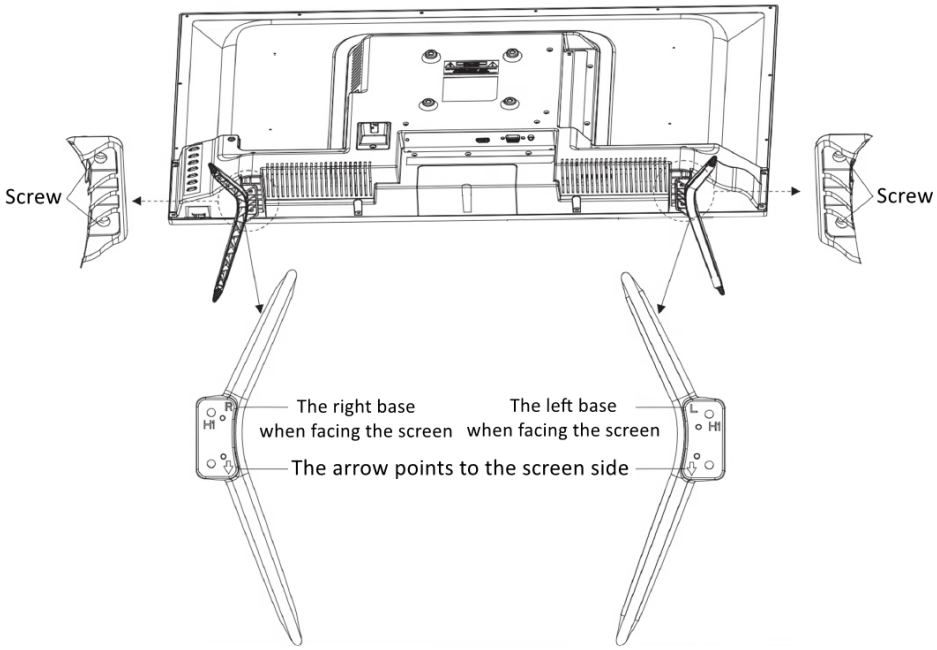

Figure 1-2 Install the Base

Step 3 Secure left and right bases to the bottom of device with two M5 screws on each side.

Step 4 After installation, place the device upright on the platform stably.

1.2 Connect the Power Cord and Signal Cables

Step 1 Connect the device to an earthed mains socket-outlet with the power cord.

Step 2 Connect the input signal source device with HDMI signal cable or VGA signal cable.

Step 3 Turn on the device.

Caution

- Power Supply: AC 220 V, 50/60 Hz.
- Power off the device and disconnect the plug if it is not in use for a long time.(Enter off mode)
- The device cannot be connected to DC power supply.
- Short press  on the remote control or  on the rear panel of the device to enter standby mode. Short press  or  again to exit the standby mode and wake up the screen.
- Standby Power Consumption: no more than 0.5 W.
- When the device is powered on and no HDMI or VGA signal is input, the screen will show a “No Signal” prompt and go to sleep mode in 10 minutes, that is, the device will enter network standby mode and run at the lowest power consumption. After receiving the HDMI or VGA signal source or short pressing  or , the device will exit the network standby mode and the screen will be woken up.
- Network Standby Power Consumption: no more than 2.0 W.

Chapter 2 Product Introduction

2.1 Buttons on Front Panel

The buttons at the bottom-right corner of the front panel are shown as follows.



Figure 2-1 Buttons on Front Panel

Table 2-1 Button Description

Button	Description
	Short press to show all the signal source.
	• OSD page: Short press to return to the previous page or exit the OSD page. • Signal Source page: Exit the signal source page. • Other pages: Enter the OSD page.
▲/▼	• Main menu page: Switch to different sub menu pages and parameters. • Signal Source page: Short Press to switch different signal sources.
◀/▶	Sub menu page: Add or decrease the value of the parameter.
	Power Switch • Working state: – OSD page: Short press to confirm. – When the screen is off, short press to restore the display.

Button	Description
	– Press to show the current signal source when the screen is on and there is no OSD. – Long press for 3s to turn off the device.(Enter off mode) ● Shutdown state: Short press to turn on the device.(Exit off mode)

2.2 Interfaces on Rear Panel

The panel appearances and interfaces vary with different models.

Note

Insulating paint has been sprayed on the interface baffle.



Figure 2-2 Interfaces on the Rear Panel

Table 2-2 Interface Description

Interface	Description	Interface	Description
POWER	Power indicator. ● When the device is in standby mode, the power indicator light is solid red. ● When the device is turned on, the power indicator light is green.	HDMI	HDMI digital signal input interface
VGA	VGA analog signal input interface	AUDIO OUT	3.5 mm audio output interface

Chapter 3 Remote Control

You can use the remote control to operate the OSD menu of the device. The buttons on the remote control are defined as follows.

Figure 3-1 Remote Control Button Description

Outlook	Button	Description
		Power on/off. Short press to turn on or turn off the device.
		Mute/Unmute. Mute or unmute the device.
	MENU	• Enter the OSD page. • Back to the main menu page.
	SOURCE	Check or select a signal source
	Direction Key	• Switch to the different menu pages or parameters. • Adjust the value of parameter.
	OK	Confirm or enter the sub menu page.

Chapter 4 OSD Operations

The display pages vary with different models. The figures followed are for illustration purpose only.

4.1 Select the Signal Source

Connect the power cable and confirm that there is a signal input, turn on the device.

Step 1 Short press ⇄ and show the signal source page.

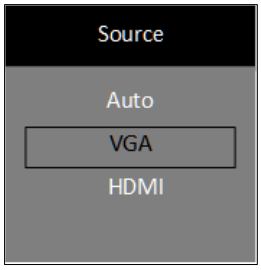

Figure 4-1 Signal Source

Step 2 Short press ▲/▼ to select the input signal source, and short press ⏻ to confirm.

4.2 Operate the OSD

Step 1 Short press ☰ to enter OSD page.

Step 2 View the main menu page.

1) Short press ▲ or ▼ to view the main menu page.
2) Short press ▼ to switch to different main menu pages.

Step 3 View the sub-menu page.

1) Short press ⏻ to enter the sub-menu page.
2) Short press ▼ to switch to different sub-menu pages.

Step 4 Adjust parameters.

1) Short press ◀ or ▶ to adjust the value of parameter.
2) Short press ▼ to switch to different parameters.

Step 5 After adjustment, short press ☰ to return to the main menu page.

Step 6 Short press ☰ again to exit the OSD page.

4.3 OSD Function

Table 4-1 OSD Function Description

Main Menu	Sub Menu	Description
Signal Source	Auto	Switch VGA signal source and HDMI signal source automatically.
	VGA	VGA signal source input.
	HDMI	HDMI digital signal source input.
	Image Mode	• **Security**: Suitable for a normal environment. It is set as default picture mode. • **Text**: Suitable for a dark room. • **Movie**: Suitable for a bright room • **User:** Set the brightness, contrast, saturation, sharpness to adjust display effect.
	Brightness	0 to 100. The higher the value is, the brighter the display will be.
	Contrast	0 to 100. The higher the value is, the clearer the display will be.
	Saturation	0 to 100. The higher the value is, the more colorful the display will be.
	Sharpness	0 to 30. Increase the value to make the image more vivid.
	MPRT	On/Off. Supports enabling MPRT when the screen refresh rate is above 100 Hz under the HDMI signal source. Once enabled, it reduces motion blur by controlling the backlight flickering, enhancing the clarity of dynamic images and ensuring smoother display of fast-moving objects.
	Color Space	Auto/0-255/16-235. HDMI signal source supports three mode settings: Auto, 16-235, and 0-255, with Auto as the default. In Auto mode, it automatically adapts to the corresponding color range based on the input signal's color gamut. For cases where the signal source's output color range identification is mismatched, manual switching to 16-235 or 0-255 is supported for adaptation.
	Eye Care Mode	Off/Low/Medium/High. It can effectively reduce blue light radiation, alleviate eye fatigue, and protect vision.

Main Menu	Sub Menu	Description
	Scaling Mode	16:9/4:3. Adjust the image scale: the ratio between the width and height of the image.
	Color Temp Mode	Warm/User/Standard/Cool. Adjust the overall color tone of the image.
	VGA Auto Adjust	Adjust/Off. If **Auto Adjust** is enabled, the related parameters will self-adjust under the following 3 circumstances. The device is restarted, a VGA input source is accessed, and the input source is switched to VGA. VGA parameters cannot be changed when Auto Adjust is disabled.
	Response Time	Off/Low/Medium/High. Once enabled, it allows setting the response speed level during screen image adjustment to reduce motion blur.
	Adaptive Sync	Off/On. Supports enabling Adaptive Sync under HDMI signal source. Once enabled, the device refresh rate will synchronize in real-time with the graphics card frame rate, reducing image tearing and stuttering. **Note** ● The host graphics card should support Adaptive Sync. ● MPRT and Adaptive Sync cannot be enabled simultaneously.
OSD	Language	中文/English/한국어/日本語 /Русский/Deutsch/Italiano/Français/ Nederlands/Português/Español/Tiếng Việt/ Български/Magyar/Ελληνικά/Čeština/Slovenčina/ Polski/Română/Dansk/Svenska/Norsk/Suomi Set the menu language.
	OSD Duration	Off/10s/30s. Set the time for the menu to disappear from the screen or turn off the settings.
	Auto Sleep	Off/30 S/1 Min/10 Min. Set the auto-sleep time for the device or turn off the settings.
	Screen Saver	Black/Blue. The background color of the screen when there is no signal.
	Mute	Off/On. Mute or unmute the device.
	Volume	0 to 100. Adjust the volume of the device.

Main Menu	Sub Menu	Description
	User Reset	No/Yes. Reset to default settings except Language.
	Software Version	Software version of the device.
	Serial Number	Serial number of the device.


See Far, Go Further